CONFIDENTIAL AND ALL RIGHTS RESERVED © 2024
NEURON ENERGY (P) LIMITED

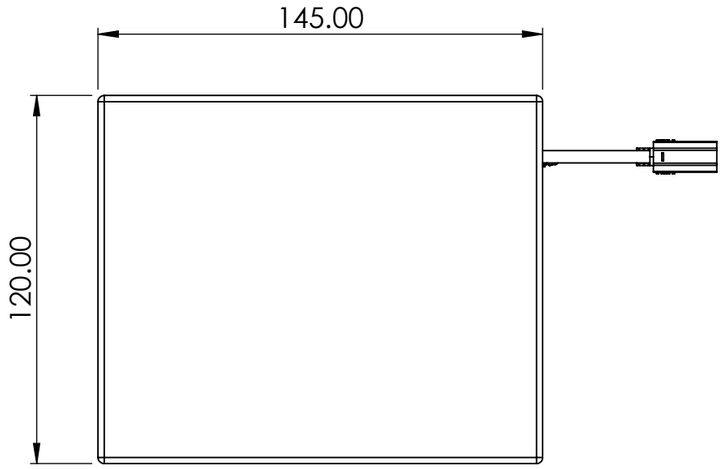

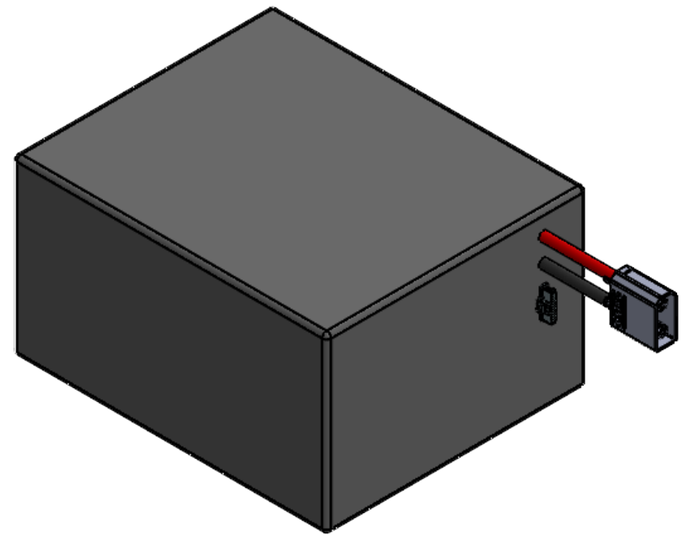

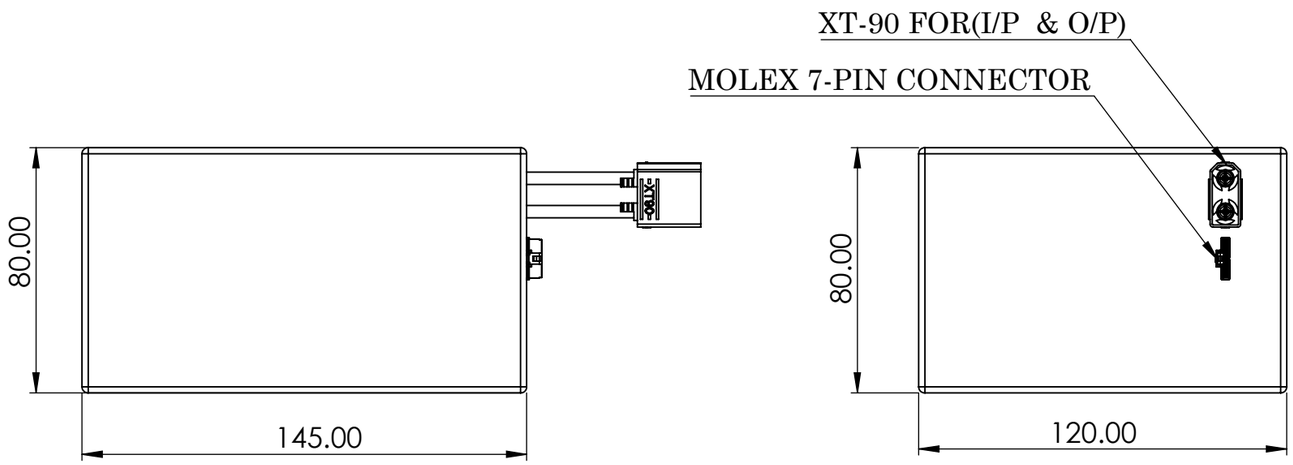

BATTERY DETAILS	
Model Name	NE21
Total Battery Capacity	0.5kWh
Nominal voltage	22.2V
Capacity	21Ah
No. of Cell in Series	6
No. of Cell in Parallel	5
Total No. of Cell	30
Chemistry and Form Factor	NMC
Max. Cut of Voltage	25.2V
Min. Cut of Voltage	N.A.
Battery Weight	2.8kg
Communication	N.A.
BMS & Version	N.A.
IP Rating	N.A.
Cell Rating	3.7V 4.2Ah
Max. Charging Current	20A
Nominal Discharging Current	20A
Max. Discharging Current	50
Connector	XT-90

NOTE
1. XT-90 WILL BE USED FOR CHARGING/DISCHARGING
2. MOLEX 7-PIN CONNECTOR WILL BE USED FOR VOLTAGE SENSING

UNLESS OTHERWISE SPECIFIED:
DIMENSIONS ARE IN MILLIMETERS
SURFACE FINISH:
TOLERANCES:
LINEAR: DIN ISO 2768-mK
ANGULAR:

FINISH:

DEBURR AND BREAK SHARP EDGES

DO NOT SCALE DRAWING

REVISION 0

TITLE: NE21

REVISION	DRAWN BY	ECN NO.	CHK'D	APPV'D	DATE

		SIGNATURE	DATE
DRAWN			02.01.2024
CHK'D			02.01.2024
APPV'D			02.01.2024

MATERIAL:

WEIGHT: 2.8kg

Neuron™

DWG NO. 10001-NUE-SA-BE-35

A3

SCALE:1:2

SHEET 1 OF 1